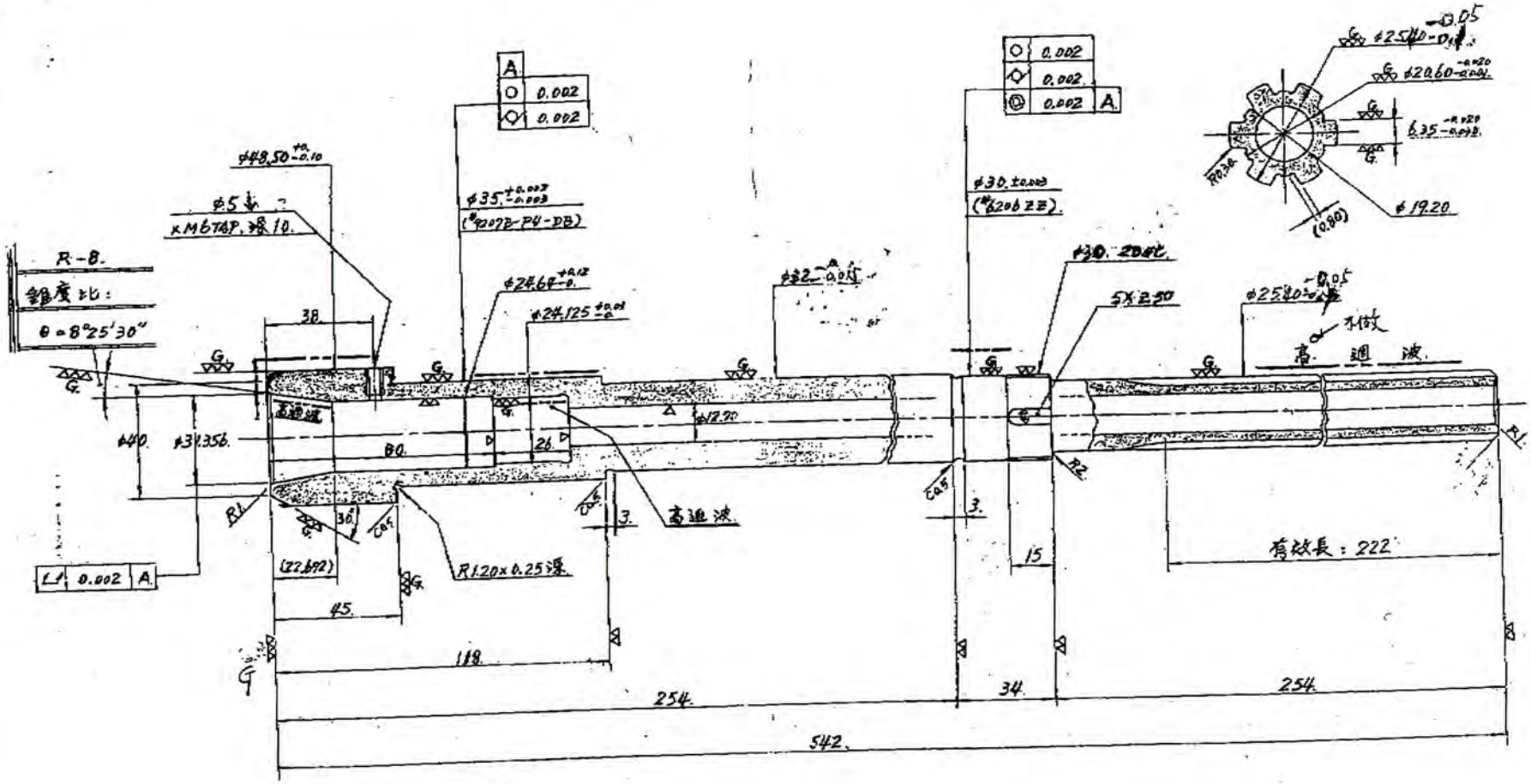

編號	更改內容	更改者	日期

一般公差	
尺寸範圍	容許差
1-4	±0.05
4-16	±0.07
16-63	±0.1
63-250	±0.2
250-1000	±0.3
1000-1500	±0.5

校對		日期	
繪圖	L.T.C.	日期	99.7.23
設計		日期	

備料尺寸	硬度: HRC. 20~26°	機種	JF-163V.
表面處理	高週波: HRC. 52~62° 深度: 0.50~0.80	件名	立主軸.
材質	SCM-4.	件號	B-129.
數量	1.	組立	(18
加工	車.銑.鉻.水牙.	圖號	(K-
比例	1:1.5.		

DRWG. NO. 8011577

SYM.	CHANGES	DATE

NOTE:
THESE DIMENSIONS ARE
PER THE ACER PRINT
ACTUAL SPINDLE DIMENSIONS
CHECK .245-.246 SPLINE TOOTH
THICKNESS AND .798 ROOT DIA.
PLEASE SPECIFY MANUFACTURING
DIMENSIONS

CUSTOMER MUST VERIFY
IF OK FOR ANY CLEARANCE ISSUES

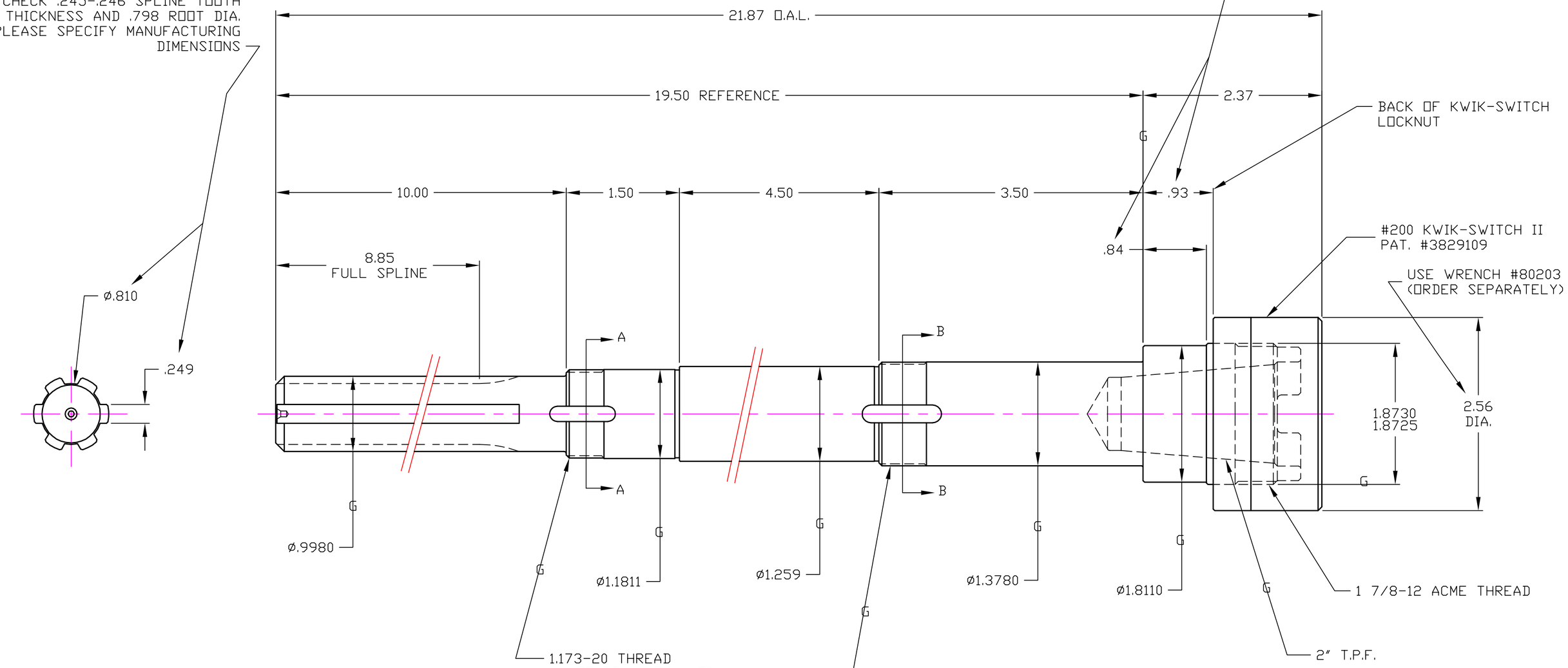

1.173-20 THREAD
MAJOR DIA. 1.173-1.170
P.D. 1.147-1.143

1.376-20 THREAD
MAJOR DIA. 1.376-1.372
P.D. 1.3447-1.3398

CUSTOMER TO VERIFY
BEARING THREAD SPECIFICATIONS
PLEASE SUPPLY BEARING LOCKNUTS
AT MANUFACTURING

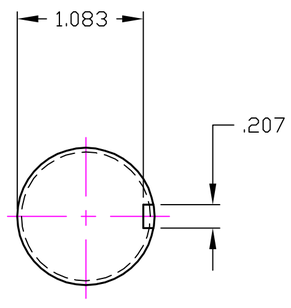

SECTION A-A

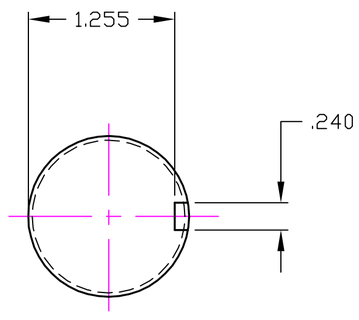

SECTION B-B

APPROVED FOR
MANUFACTURING

APPROVED: NO REVISIONS ☐
AS REVISED ☐

BY: _____

COMPANY: _____

DATE: _____

DET. NO.	DESCRIPTION	AMT.	MAT'L	PART NO. / SIZE

6-■=SIGNIFICANT CHARACTERISTICS
5-BREAK SHARP CORNERS .02 X 45°
4-G=32 MICRO FINISH OR BETTER ON ALL GROUND SURFACES
3-125 MICRO FINISH OR BETTER ON ALL MACHINED SURFACES
2-ANGLES ±0°30'
1-(.00)=±.01 (.000)=±.005
UNLESS SPECIFIED

THIS DRAWING IS THE PROPERTY OF UNIVERSAL/DEVLIEG AND IS NOT TO BE COPIED, DUPLICATED, OR USED BY PARTIES OTHER THAN UNIVERSAL/DEVLIEG TO MANUFACTURE THE PRODUCTS ILLUSTRATED, OR SUBMITTED TO OTHER PARTIES WITHOUT THE EXPRESS WRITTEN PERMISSION OF:
UNIVERSAL/DeVlieg LLC
A division of: Mistequay Group, Ltd.

HARDEN & GRIND

DRAWN BY: S.L.
DATE: 12-12-2011
CHECKED BY:
DATE:
SCALE: FULL

SHEET

UNIVERSAL/DeVlieg LLC
A division of: Mistequay Group, Ltd.

UNIVERSAL ENGINEERING
DEVLIEG® MICRO-Adjust™

REF. 8010835 ASS'Y NO.

TITLE
#200 KWIK-SWITCH II SPINDLE ASSEMBLY TO FIT ACER MACHINE

CUST. NO. & REF.
FROM CUST. SAMPLE

DRWG. NO.
8011577

C